LEG SUPPORT

BOLT ON BRACE

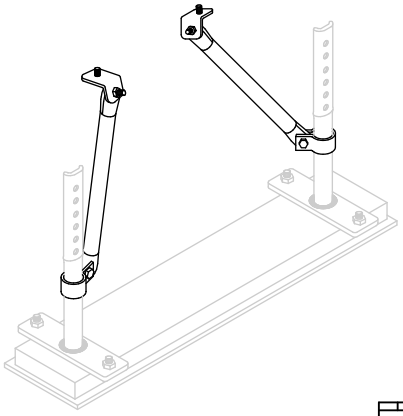

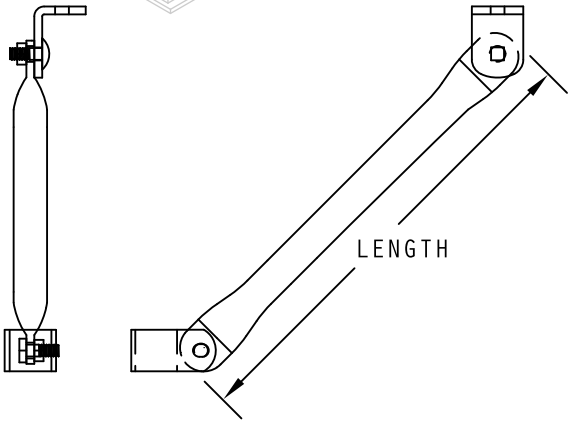

CATALOG NUMBERING SYSTEM
(FOR EACH BRACE)
SAMPLE CATALOG NUMBER:
EF BB ** S A

- A — COMPLETE W/ANGLE AND CLIP
- S — S = STEEL
- ** — LENGTHS AVAILABLE
- BB — BOLT ON BRACE

ADDITIONAL LENGTHS AVAILABLE

AVAILABLE IN 24", 30", AND 36"
STEEL
EFBB24SA - EFBB36SA